ECE 1101L: Lab 12 – Relationships for Resistors, Capacitors, and Inductors

Introduction: In this lab we used voltage across a resistor, capacitor, and inductor to calculate current through them and find the phase difference between voltage and current. It is important to note that we used a 0.15µF capacitor instead of a 0.1µF.

Pre-Lab:

1.

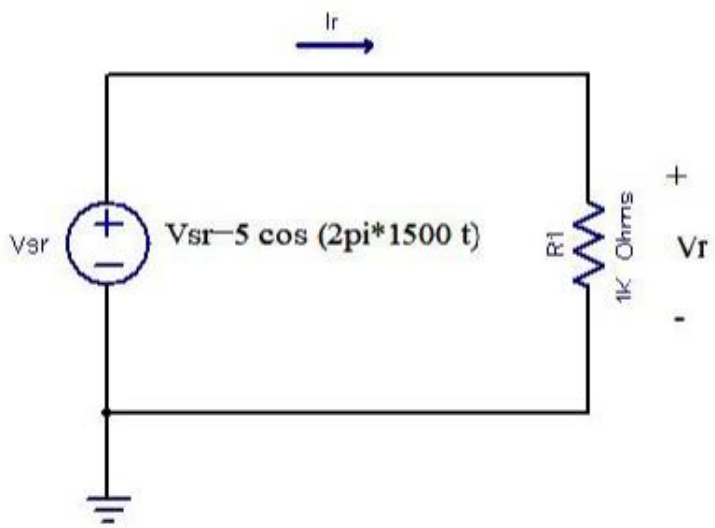

a. Vr(t)= 5cos(2pi*1500t) V & Ir(t)= 5cos(2pi*1500t) mA
b. 0°

2.

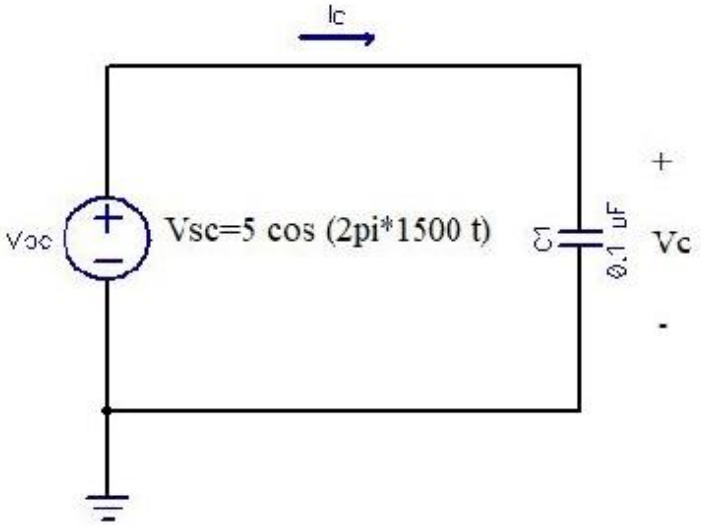

a. Vc(t)=5cos(2pi*1500t) V & Ic(t)= -5sin(2pi*1500t) mA
b. -90°

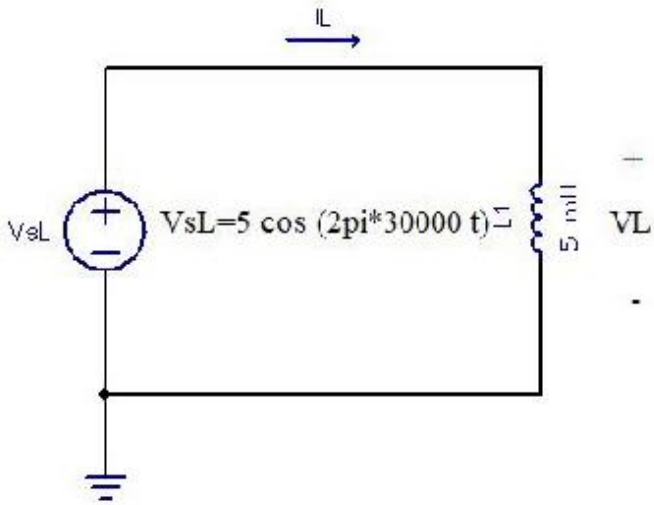

3.
   a. VL(t)=5cos(2pi*30000t)V & IL(t)=5sin(2pi*30000t) mA
   b. 90°
4. a. They will differ by about 1.67 divisions

b. 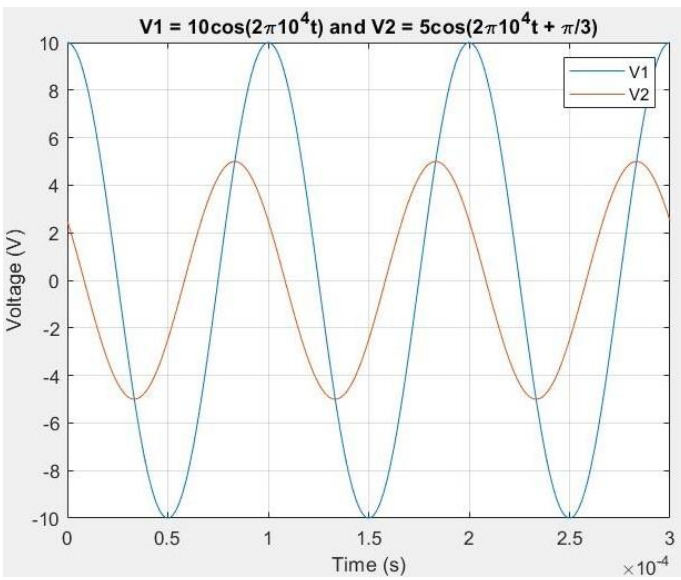

Lab Experiments

Experiment 1:

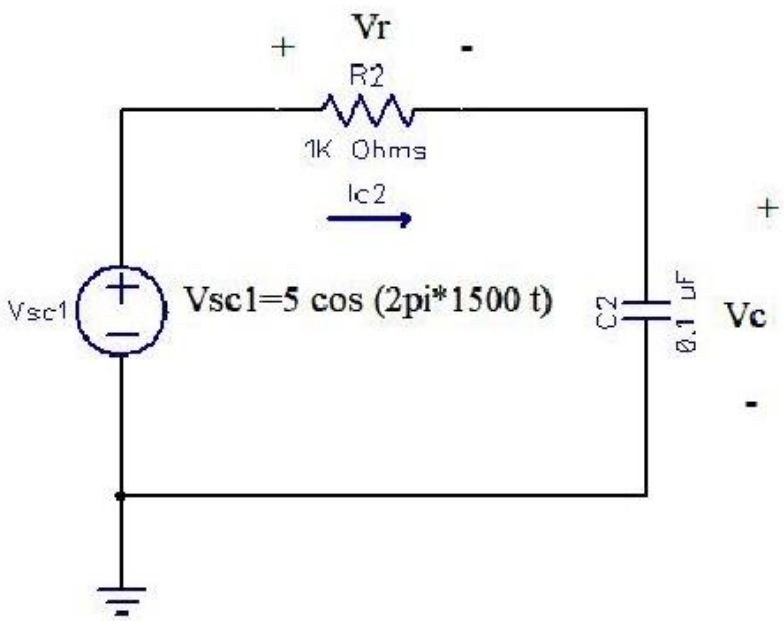

Vc(t) = 2.9375cos(2pi*1500t)V

Vr(t)=4.18cos(2pi*1500t)V

Phase difference = 93.53°

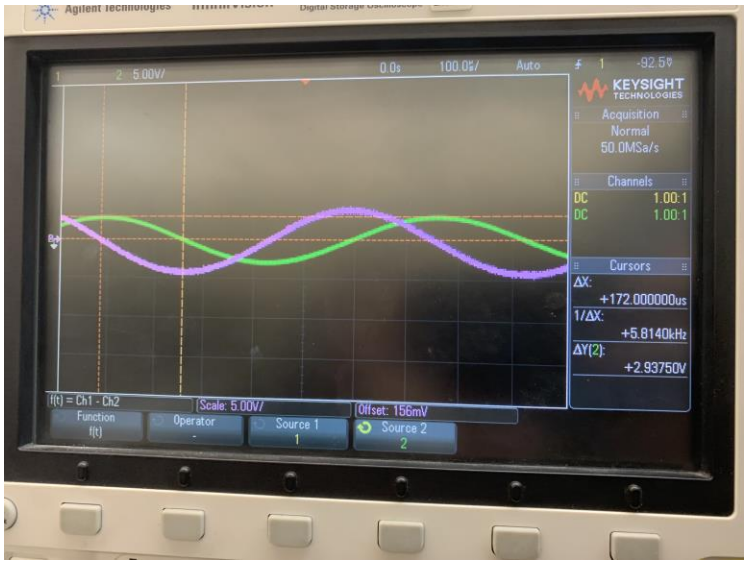

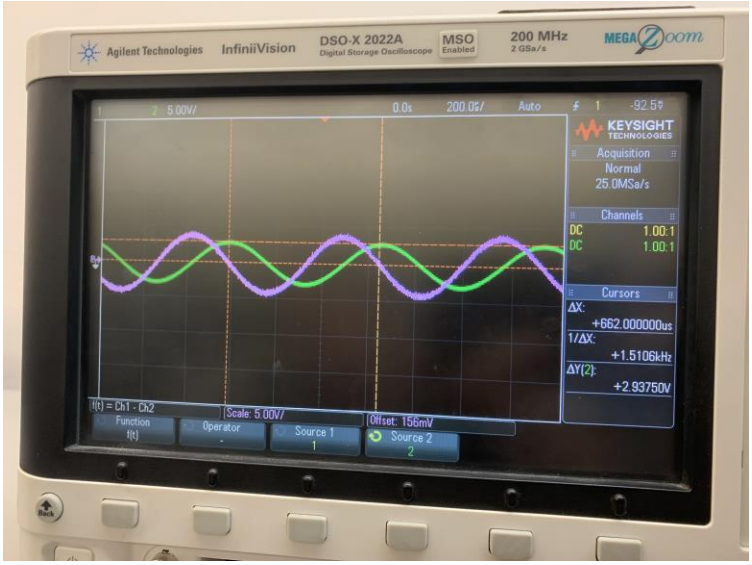

Experiment 2:

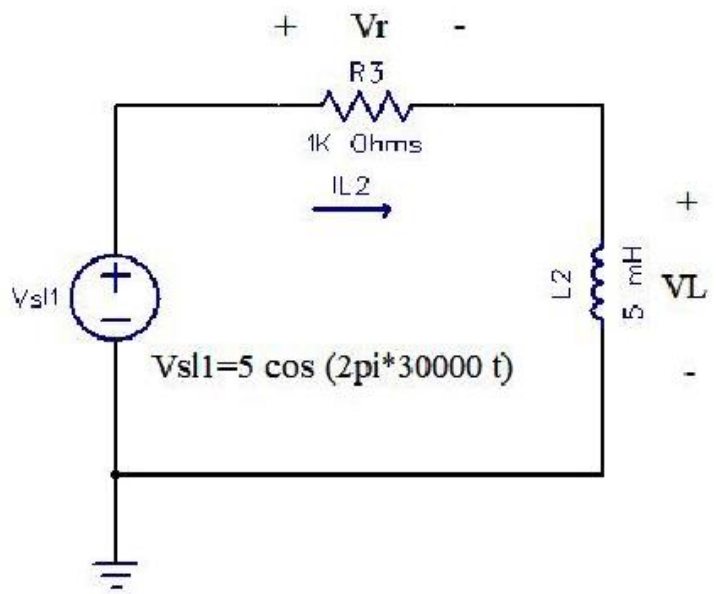

Vc(t) = 3.36cos(2pi*30000t)

Phase difference = 84.58°

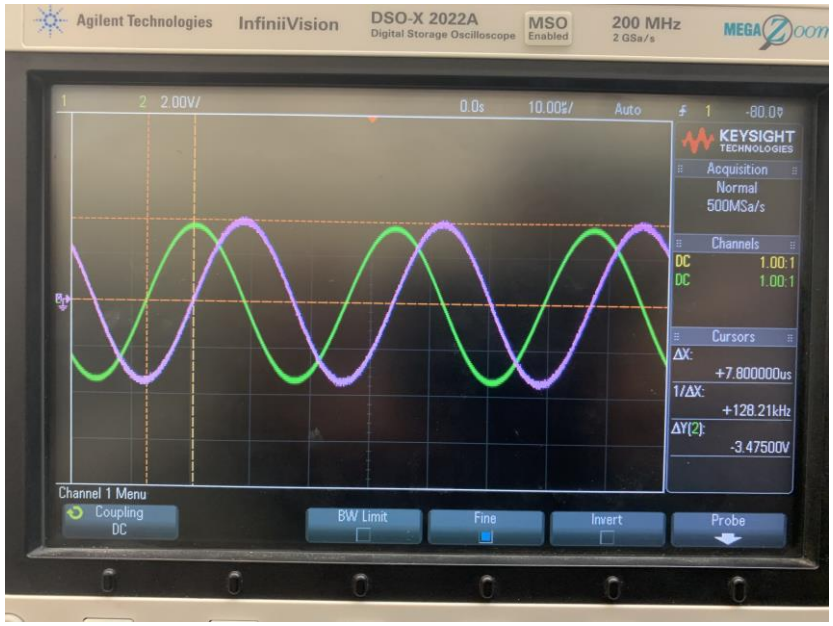

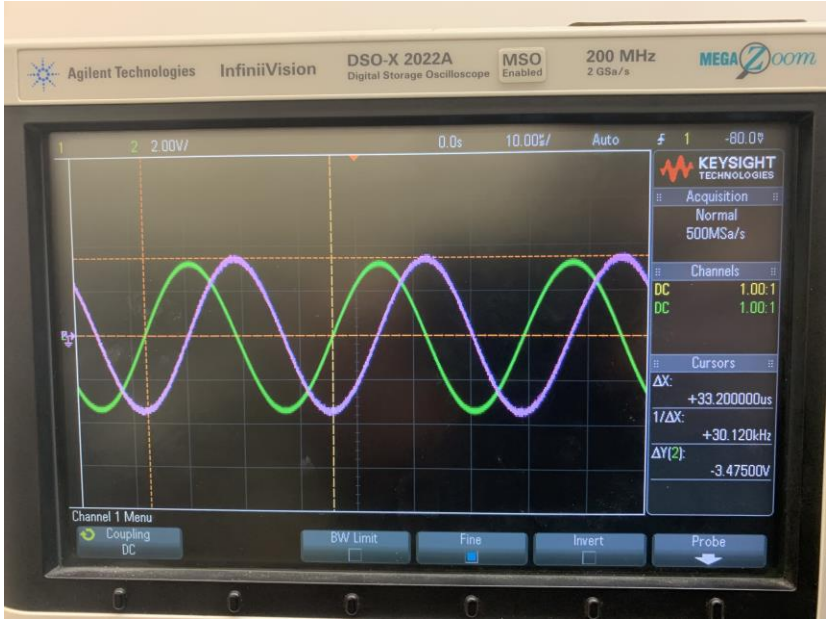

Post Lab:

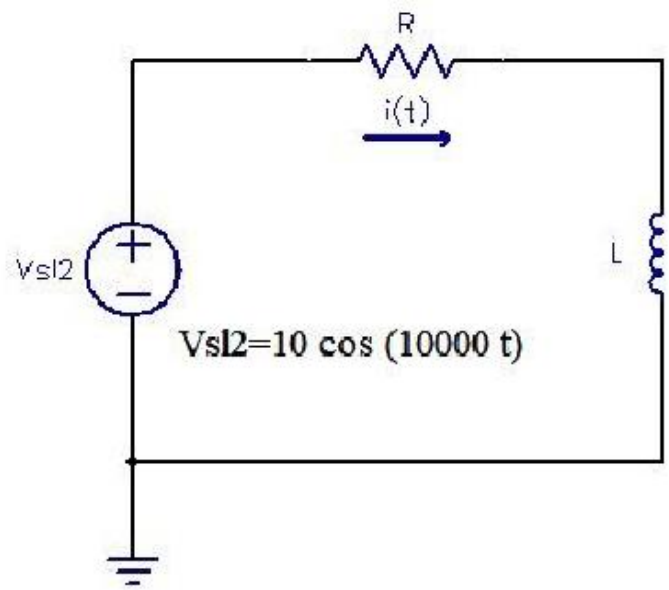

1.
   a. R=1kΩ
   b. L=0.1H

Conclusion: In conclusion this lab was really interesting and helped reinforce all the skills I am learning in lecture. The most difficult part was figuring out the oscilloscope and the easiest being making the circuits. I enjoyed this lab as it allowed me to calculate current using different equations and finding the phase difference.